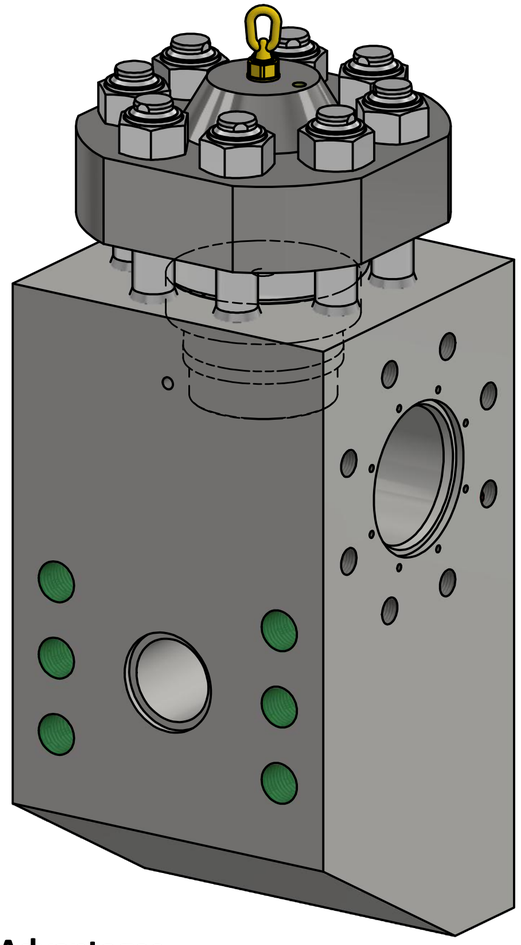

Advantages

- Until now not achievable short clamping and relieving time of some minutes only
- Simple design of few components only
- No corrosion possible as all parts of stainless steel
- Durable clamping as no springs involved

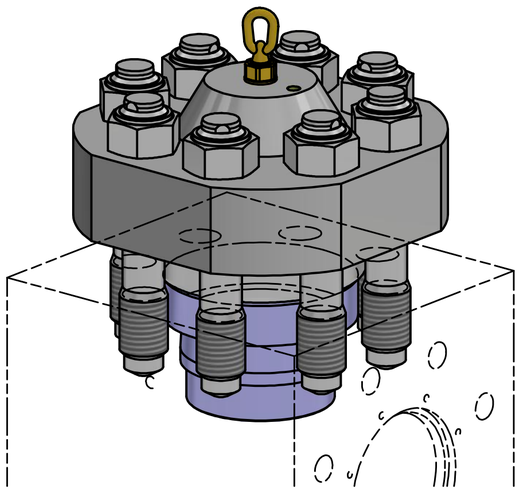

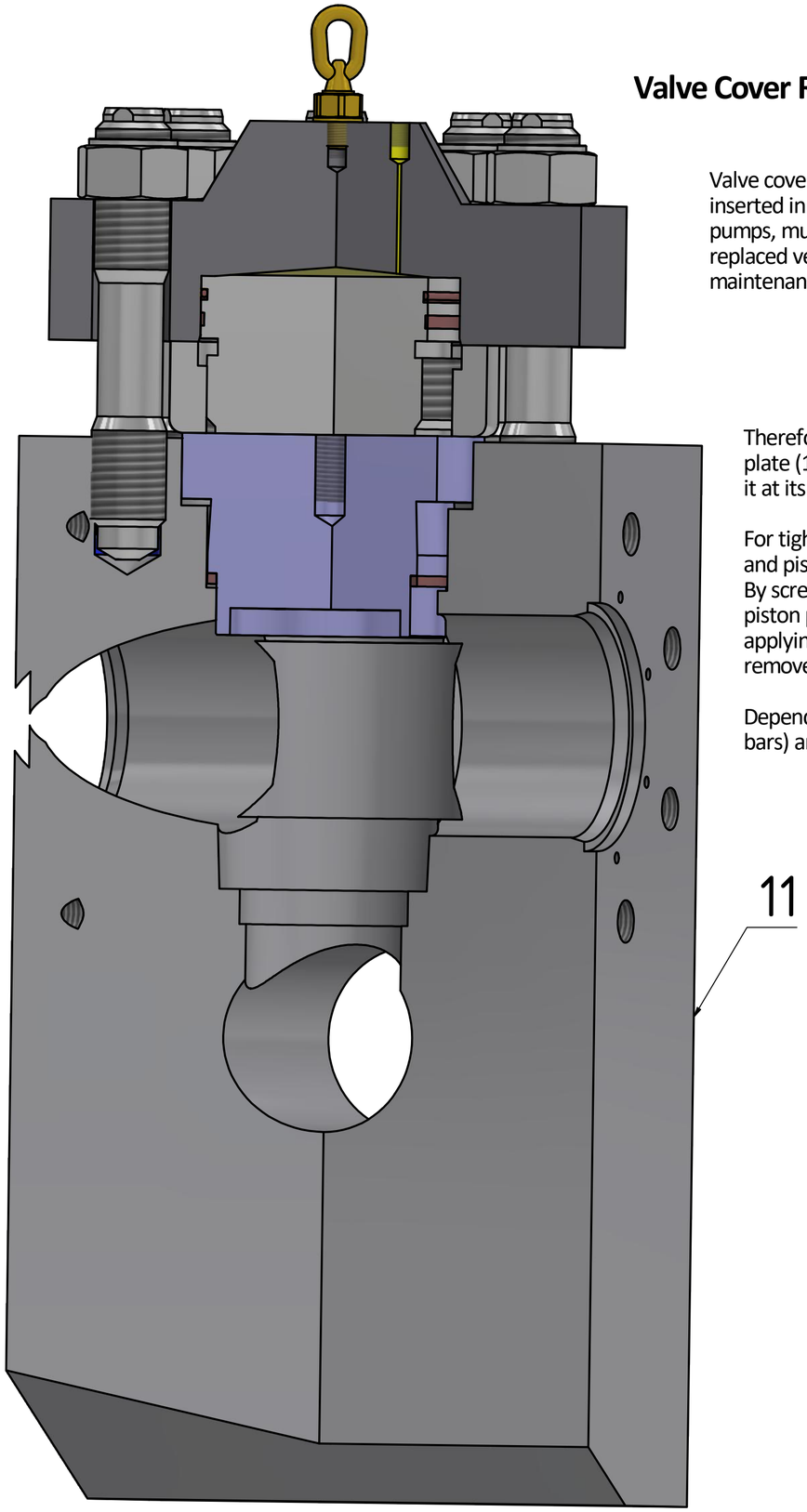

Valve Cover Retainer for Mud Pumps

Valve cover plates, horizontally or vertically inserted in the liquid ends (11) of those mud pumps, must be able to be pulled out and replaced very fast for inspection and maintenance purposes.

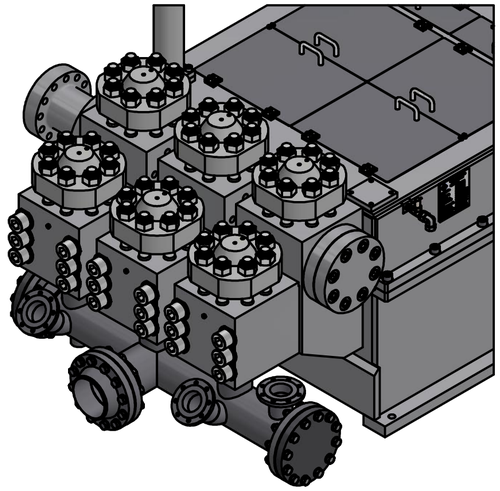

Therefore new, longer threaded bolts (5) are screwed in the existing bores pressing the retainer plate (1) towards a ringnut (3) that again is pushing a piston (2) towards the valve cover and fixing it at its place.

For tightening and relieving hydraulic oil is being pressed into the space between retainer plate and piston via a quick acting coupling (10) and a connecting channel elongating the bolts a little. By screwing the ringnut clockwise along the piston the elongation is compensated causing the piston pressing hard onto the valve cover when oil pressure is dropped. When relieving, after applying oil pressure, the ringnut is screwed counter-clockwise and so the nuts (5) can be removed easily when oil pressure is dropped again giving access to the valve cover.

Depending of geometry and size of the components hydraulic pressures of up to 10,000 PSI (700 bars) are applied according to mud pump operating pressures of up to 7,500 PSI (530 bars).